Clouds and the Earth's Radiant Energy System (CERES)

Data Management System

Software Design Document

CERES Inversion to Instantaneous TOA Fluxes and Empirical Estimates of Surface Radiation Budget (Subsystems 4.5 and 4.6)

ARCHITECTURAL DRAFT

Erika Geier[1], Lynn Jimenez[2],
Sandy Nolan[2], and John Robbins[2]

[1]NASA Langley Research Center
Mail Stop 423
Hampton, VA 23681-0001

[2]Science Applications International Corporation (SAIC)
One Enterprise Parkway, Suite 300
Hampton, Virginia 23666

Atmospheric Sciences Division
NASA Langley Research Center
Hampton, Virginia 23681-0001

Release 1.0
March 1996

Preface

The Clouds and the Earth's Radiant Energy System (CERES) Data Management System supports the data processing needs of the CERES science research to increase understanding of the Earth's climate and radiant environment. The CERES Data Management Team works with the CERES Science Team to develop the software necessary to support the science algorithms. This software, being developed to operate at the Langley Distributed Active Archive Center (DAAC), produces an extensive set of science data products.

The Data Management System consists of 12 subsystems; each subsystem represents a stand-alone executable program. Each subsystem executes when all of its required input data sets are available and produces one or more archival science products.

The documentation for each subsystem describes the software design at various stages of the development process and includes items such as Software Requirements Documents, Data Products Catalogs, Software Design Documents, Software Test Plans, and User's Guides.

This version of the Software Design Document records the architectural design of each Subsystem for Release 1 code development and testing of the CERES science algorithms. This is a PRELIMINARY document, intended for internal distribution only. Its primary purpose is to record what was done to accomplish Release 1 development and to be used as a reference for Release 2 development.

TABLE OF CONTENTS

Section Page

1.0 Introduction 1
1.1 Document Overview 1
1.2 Subsystem Overview 2
1.3 Key Concepts 3
1.4 Implementation Constraints 6
2.0 Architectural Design 7
References 16
Appendix A - Abbreviations, Acronyms, and Symbols A-1
Appendix B - External Interface B-1
Appendix C - Data and Constants C-1
Appendix D - Error Messages D-1
Appendix E - Structure Chart Symbols E-1

LIST OF FIGURES

Figure Page

Figure 2-1. CERES TOA and Surface Fluxes Processing Functional Structure Chart 9
Figure 2-2. CERES TOA and Surface Fluxes Processing Flow 15
Figure B-1. CERES TOA and Surface Fluxes QC Report B-4
Figure E-1. Structure Chart Symbols E-1

LIST OF TABLES

Table Page

Table 1-1. Basic Cloud Categories 4
Table 1-2. ERBE Inversion Scene Types 4
Table 1-3. Colatitudinal Zone Definitions 5
Table 1-4. Spectral Correction Scene Types 5
Table C-1. F90 Module inv_data Constants C-1
Table D-1. Error Messages D-1

1.0 Introduction

The Clouds and the Earth's Radiant Energy System (CERES) is a key component of the Earth Observing System (EOS). The CERES instruments are improved models of the Earth Radiation Budget Experiment (ERBE) scanner instruments, which operated from 1984 through 1990 on the National Aeronautics and Space Administration's (NASA) Earth Radiation Budget Satellite (ERBS) and on the National Oceanic and Atmospheric Administration's (NOAA) operational weather satellites NOAA-9 and NOAA-10. The strategy of flying instruments on Sun-synchronous, polar orbiting satellites, such as NOAA-9 and NOAA-10, simultaneously with instruments on satellites that have precessing orbits in lower inclinations, such as ERBS, was successfully developed in ERBE to reduce time sampling errors. CERES will continue that strategy by flying instruments on the polar orbiting EOS platforms simultaneously with an instrument on the Tropical Rainfall Measuring Mission (TRMM) spacecraft, which has an orbital inclination of 35 degrees. In addition, to reduce the uncertainty in data interpretation and to improve the consistency between the cloud parameters and the radiation fields, CERES will include cloud imager data and other atmospheric parameters. The first CERES instrument is scheduled to be launched on the TRMM spacecraft in 1997. Additional CERES instruments will fly on the EOS-AM platforms, the first of which is scheduled for launch in 1998, and on the EOS-PM platforms, the first of which is scheduled for launch in 2000.

1.1 Document Overview

This document provides the Release 1 Software Design for the CERES Inversion to Instantaneous TOA Fluxes and Empirical Estimates of Surface Radiation Budget, Subsystems 4.5 and 4.6, as defined in the CERES Software Requirements Document (SRD) (see Reference 1). This design will serve as a basis for Subsystems 4.5 and 4.6 Release 1 software. The software design for Subsystems 4.1 through 4.4 will be addressed in separate documents (see References 2 and 3). The intended audience of this document consists of CERES subsystem data management teams, subsystem test teams, and science reviewers.

This document is organized as follows:

Section 1.0 Introduction - gives an overview of CERES project as a key component of EOS.

Section 1.1 Document Overview - states the purpose of this document and gives a description of its general content.

Section 1.2 Subsystem Overview - presents an overview of Cloud Retrieval and Radiative Flux Inversion Subsystem 4.

Section 1.3 Key Concepts - defines the key concepts used throughout this document.

Section 1.4 Implementation Constraints - describes constraints on the design and implementation of the Release 1 software for Subsystems 4.5 and 4.6.

Section 2.0 Architectural Design - describes the hierarchical structure and processing flow of Subsystems 4.5 and 4.6.

References

Appendix A Abbreviations, Acronyms, and Symbols

Appendix B External Interface - describes each data file use by Subsystems 4.5 and 4.6. A description and example of the Quality Control Report generated by Subsystems 4.5 and 4.6 is also included in this appendix.

Appendix C Data and Constants - describes the global data used by Subsystem 4.5 and 4.6.

Appendix D Error Messages - provides a list of error messages that may be generated by Subsystems 4.5 and 4.6.

Appendix E Structure Chart Symbols - defines symbols used on the hierarchical structure charts and flow diagrams presented in this document.

1.2 Subsystem Overview

The Cloud Retrieval and Radiative Flux Inversion Subsystem 4 is divided into six subsystems that correspond to the CERES Algorithm Theoretical Basis Document (ATBD) Subsystems 4.1 through 4.6 (see Reference 4). The Cloud Working Group is responsible for Subsystems 4.1 through 4.4, the Inversion Working Group is responsible for Subsystem 4.5, and the Surface and Atmospheric Radiation Budget (SARB) Working Group is responsible for Subsystem 4.6. The six subsystems described in the CERES ATBD under Subsystem 4 are the following:

1. Subsystem 4.1, *Imager Clear-Sky Determination and Cloud Detection*, will collect ancillary input information for each imager pixel; determine the surface conditions and classify each pixel as clear, cloudy, or uncertain; and determine a cloud mask (see Reference 4).

2. Subsystem 4.2, *Cloud Pressure Retrieval*, will determine cloud macrophysical properties for cloudy pixels (see Reference 4).

3. Subsystem 4.3, *Cloud Optical Property Retrieval*, will determine cloud microphysical properties for cloudy pixels (see Reference 4).

4. Subsystem 4.4, *Convolution of Imager Cloud Properties with CERES Footprint Point Spread Function (PSF)*, will map imager pixel cloud properties onto the CERES footprint and calculate cloud statistics over the footprint (see Reference 5).

5. Subsystem 4.5, *CERES Inversion to Instantaneous TOA Fluxes*, will determine the CERES Inversion shortwave (SW) and longwave (LW) scene types based on the surface type and

cloud parameters for each CERES footprint and will derive CERES unfiltered SW, LW, and window (WN) radiances by applying spectral correction coefficients to filtered SW, total (TOT), and WN radiances. The unfiltered radiances will be inverted to instantaneous Top-of-the-Atmosphere (TOA) fluxes (see Reference 6).

6. Subsystem 4.6, *Estimate Surface Radiation Budget*, will empirically estimate the SW downward, SW net, LW downward, and LW net surface fluxes based on TOA fluxes, cloud properties, and meteorological data (see Reference 7).

Subsystem 4 software will be designed as three software packages. The software for Subsystem 4.4 will generate a preliminary Single Satellite CERES Footprint TOA and Surface Fluxes (SSF) file. This preliminary SSF file will be input data to the Subsystems 4.5 and 4.6 software, which will fill in Angular Distribution Model (ADM) types, unfiltered radiances, and TOA and surface flux parameters on each footprint and create an SSF archival product. The software design for Subsystems 4.1 through 4.4 will be described in separate documents (see References 2 and 3).

1.3 Key Concepts

The following key concepts are associated with Subsystems 4.5 and 4.6:

Angular Distribution Models (ADMs) are a set of values used to correct for the anisotropy of the radiation field when deriving radiative flux using scanner radiance observations. LW radiance ADMs (limb-darkening models) are a function of Inversion scene type, viewing zenith, and colatitude, while SW radiance ADMs (bidirectional models) are a function of Inversion scene type and three angles: satellite viewing zenith, solar zenith, and relative azimuth between the Sun and the satellite. The ERBE ADMs will be used with Release 1 and Release 2 software (see Reference 1).

During the 18 months following the TRMM launch, the Inversion Working Group will be preparing a new set of SW, LW, and WN channel ADMs. These new CERES ADMs will be used as part of the Release 3 data processing system to invert SW, LW, and WN channel unfiltered radiance measurements to fluxes at the TOA. It is anticipated that previously calculated TOA fluxes based on ERBE ADMs will be recalculated using the new CERES ADMs. The surface fluxes will also be recalculated and stored on the SSF product.

CERES footprint is defined as a single CERES Field-of-View (FOV). Cloud imager derived properties will be convolved with the CERES PSF for each CERES footprint (see Reference 5).

CERES ADM types will be based on a combination of geographic surface types and cloud properties. For Release 1 and Release 2, the twelve ERBE Inversion scene types will be used as the CERES ADM types (see Reference 6).

ERBE Inversion scene types are scene identification types based on a combination of the five geographic surface types (ocean, land, snow, desert, and coastal or land-ocean mix) and four basic cloud covers which are listed in Table 1-1. The twelve ERBE scene types are listed in Table 1-2.

Table 1-1. Basic Cloud Categories

CLOUD CATEGORY	DEFINITION
Clear	0% $\leq$ cloud cover $\leq$ 5%
Partly cloudy	5% $<$ cloud cover $\leq$ 50%
Mostly cloudy	50% $<$ cloud cover $\leq$ 95%
Overcast	95% $<$ cloud cover $\leq$ 100%

Table 1-2. ERBE Inversion Scene Types

INDEX	SCENE TYPES
1	Clear ocean
2	Clear land
3	Clear snow
4	Clear desert
5	Clear land-ocean mix (coastal)
6	Partly cloudy over ocean
7	Partly cloudy over land or desert
8	Partly cloudy over land-ocean mix
9	Mostly cloudy over ocean
10	Mostly cloudy over land or desert
11	Mostly cloudy over land-ocean mix
12	Overcast

CERES Spectral Correction Scene Types are the same for CERES as for ERBE. There are five scenes [ocean, land, desert, snow, cloud] and three colatitudinal zones, listed in Table 1-3 for a total of 12 Spectral Correction Scene Types as shown in Table 1-4.

Table 1-3. Colatitudinal Zone Definitions

COLATITUDINAL ZONE	RANGE OF COLATITUDE, θ
Tropical	$60^\circ < \theta \leq 120^\circ$
Mid-latitudinal	$30^\circ < \theta \leq 60^\circ$ or $120^\circ < \theta \leq 150^\circ$
Polar	$0^\circ \leq \theta \leq 30^\circ$ or $150^\circ < \theta \leq 180^\circ$

Table 1-4. Spectral Correction Scene Types

SCENE TYPE	COLATITUDINAL ZONE	SCENE
1	Tropical	Ocean
2	Mid-latitudinal	Ocean
3	Polar	Ocean
4	Tropical	Land
5	Mid-latitudinal	Land
6	Polar	Land
7	Tropical	Clouds
8	Mid-latitudinal	Clouds
9	Polar	Clouds
10	Tropical or Mid-latitudinal	Snow
11	Polar	Snow
12	Tropical or Mid-latitudinal	Desert

Spectral correction coefficients are sets of constants which correct the radiometric measurements for the imperfect spectral response of the instruments. There are separate sets of daytime and nighttime coefficients for each satellite instrument (see Reference 1). Appendix B of this document contains a detailed description of the CERES Spectral Correction Coefficients File (SCCOEF).

1.4 Implementation Constraints

The CERES Inversion to Instantaneous TOA Fluxes and the Empirical Estimates of Surface Radiation Budget, Subsystems 4.5 and 4.6, software design was formulated based on the Subsystems' software requirements (see Reference 6) and meetings with the CERES Science Team and Data Management Team.

The software design approach for Subsystems 4.5 and 4.6 takes into account the plan for CERES software to be designed in three releases. The first two releases of the software will be completed prior to the launch of the TRMM satellite and the third release is expected to be operational 18 months after the TRMM launch. Release 1 software will process global data from the existing ERBE/Advanced Very High Resolution Radiometer (AVHRR)/High Resolution Infrared Radiation Sounder (HIRS) data from the NOAA-9 and NOAA-10 spacecraft and will be used to test algorithm concepts. Release 2 software will process data from the CERES Instruments. Based on the processing analysis of Release 2 data, the Inversion Working Group will develop a set of SW, LW and WN channel CERES ADMs. Release 3 software will use these improved ADMs to derive TOA flux estimates for each CERES footprint. Until the new CERES ADMs are available, the ERBE ADMs will be used (see Reference 6).

Subsystems 4.5 and 4.6 software design will be implemented using the FORTRAN 90 programming language and the Science Data Production (SDP) Toolkit utilities (see Reference 8). Subsystem software will use self-contained FORTRAN 90 modules which can be modified and replaced without effecting other parts of the software.

2.0 Architectural Design

CERES Inversion to Instantaneous TOA Fluxes and the Empirical Estimates of Surface Radiation Budget, Subsystems 4.5 and 4.6, converts filtered CERES SW, TOT, and WN channel radiance measurements to instantaneous SW, LW, and WN radiative flux estimates at the TOA, and produces SW and LW radiative flux estimates at the Earth's surface for each CERES footprint.

The first function of the Subsystems 4.5 and 4.6 software is to initialize the Subsystem by obtaining processing and control parameters and opening external files. The Preliminary SSF (PRE_SSF) file; the archival output SSF file; and the Meteorological, Ozone, and Aerosol (MOA) product file are opened using the SDP Toolkit, and metadata is read from the PRE_SSF file header. The spectral correction coefficients and the angular distribution models files are opened using the SDP Toolkit routines. The Spectral Correction Coefficients and the ADMs are then read into memory. The Spectral Correction model number parameter (see Reference 1) will be obtained from the SDP Toolkit Process Control File (PCF). Following subsystem initialization, PRE_SSF footprint records are read in and processed individually.

For each footprint, all of the SSF footprint parameters which are calculated by Subsystem 4.5 are initialized to default values. The geo-scene type, cloud coverage, and ADM types are determined, and the ADM types are written to the SSF archival product footprint. The CERES grid region number for the footprint is calculated, and the corresponding MOA parameters for that region are stored for input to the surface flux algorithms. The individual CERES filtered radiance bit flags are unpacked from the Instrument Earth Scans (IES) Quality Flag on the PRE_SSF. If a radiance bit flag indicates valid data and the filtered radiance data is within range, then the corresponding filtered radiance flag on the SSF footprint is set to good.

If a good filtered radiance measurement exists for the footprint, then the Inversion driver subroutine is called. The SW, TOT, and WN radiances are unfiltered into SW, LW, and WN channel radiances using one of two spectral correction models (see Reference 1). Model 1 calculates the SW and LW unfiltered radiances with no WN channel component and Model 2 calculates the SW and LW unfiltered radiances using a WN channel component. In both models, the WN channel measurement is unfiltered using only a WN channel component. Each of these unfiltered measurements, m, is inverted to a flux, $\hat{M}$, at the TOA by

$$\hat{M} = \frac{\pi m}{b}$$

where b is an interpolated SW or LW ADM (see Appendix A) for the footprint. WN TOA fluxes are inverted using an interpolated LW ADM. SW, LW, and WN unfiltered radiance parameters and SW, LW, and WN TOA flux parameters that have values within a predefined range are written to the SSF footprint (see Reference 9).

After the radiances are inverted, all surface flux parameters on the SSF footprint are initialized to default values and the SW and LW surface flux algorithms for the footprint are processed. The Model A SW net and downward surface fluxes are estimated using the Li-Leighton algorithm (see References 10 and 11). (Model B SW flux parameters on the SSF footprint are place holders and will contain a default value.) Model A LW net and downward surface fluxes are estimated using

the Ramanathan-Inamdar algorithm if the appropriate conditions are met. For the Release 1 Subsystem 4.6 software, the Model A LW flux parameters are estimated only if the scene type is clear-sky over ice free ocean or clear-sky over land in the tropics (see Reference 12). Model B LW net and downward surface fluxes are estimated using the Gupta algorithm for all scene types (see Reference 13). The surface flux estimates that are within a predefined range are written to the corresponding parameters on the SSF footprint (see Reference 9). The SSF record is then written to the archival SSF file.

After all PRE_SSF footprints have been processed, Subsystem finalization is performed. All opened files are closed and a Quality Control Report is written. Figure 2-1 shows the hierarchical structure of Subsystems 4.5 and 4.6 and Figure 2-2 illustrates the Subsystem data processing flow.

There is one operating mode for the CERES Inversion to Instantaneous TOA Fluxes and the Empirical Estimates of Surface Radiation Budget, Subsystems 4.5 and 4.6, which accepts input for both the initial processing and the reprocessing of data. Initial processing will use PRE_SSF input created by the Convolution of Imager Cloud Properties with CERES Footprint Point Spread Function, Subsystem 4.4, (see Reference 3). Reprocessing will use input data from an archival SSF product. The input data for both initial processing and reprocessing will use the same format.

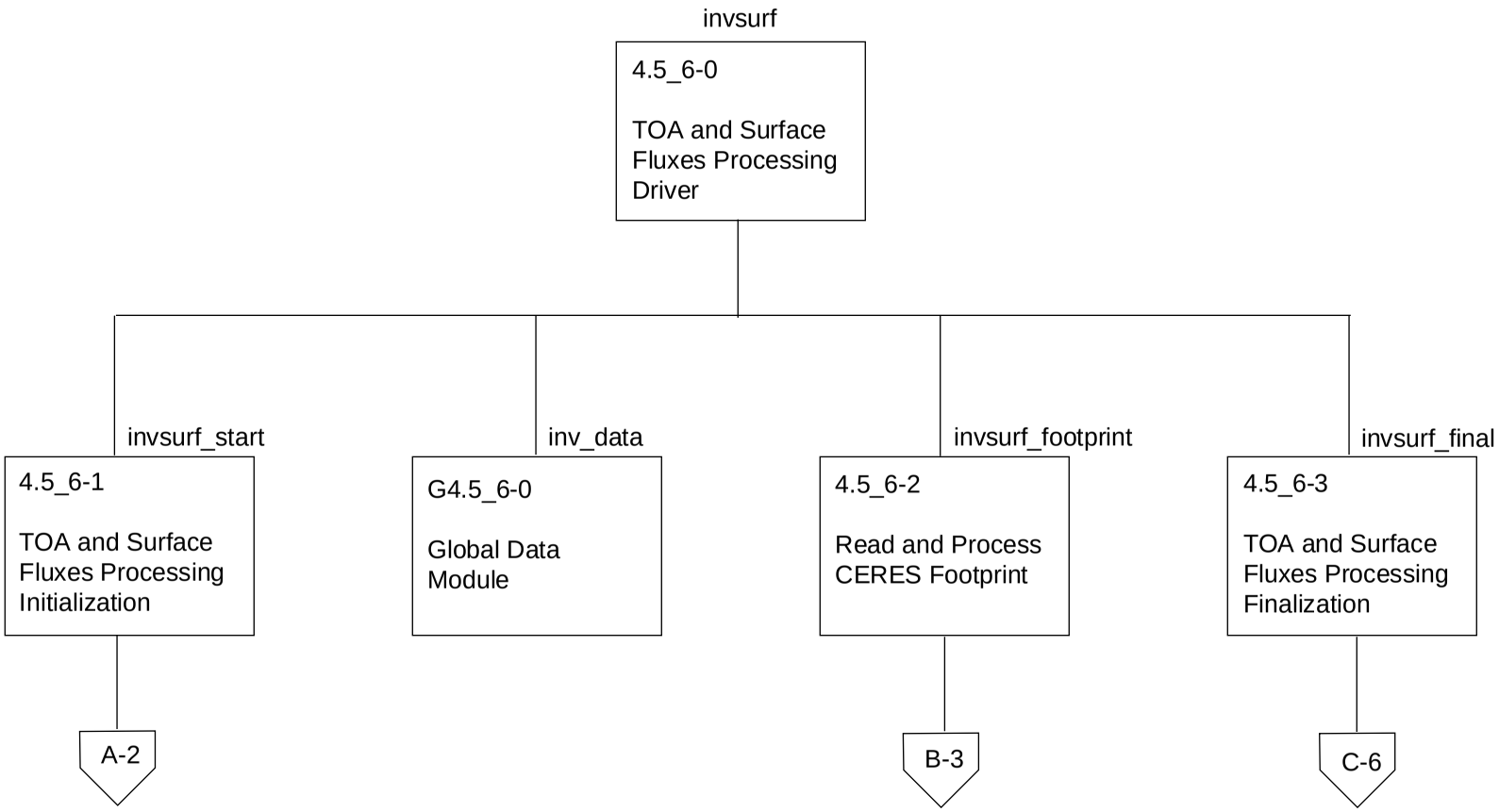

Figure 2-1. CERES TOA and Surface Fluxes Processing Functional Structure Chart (1 of 6)

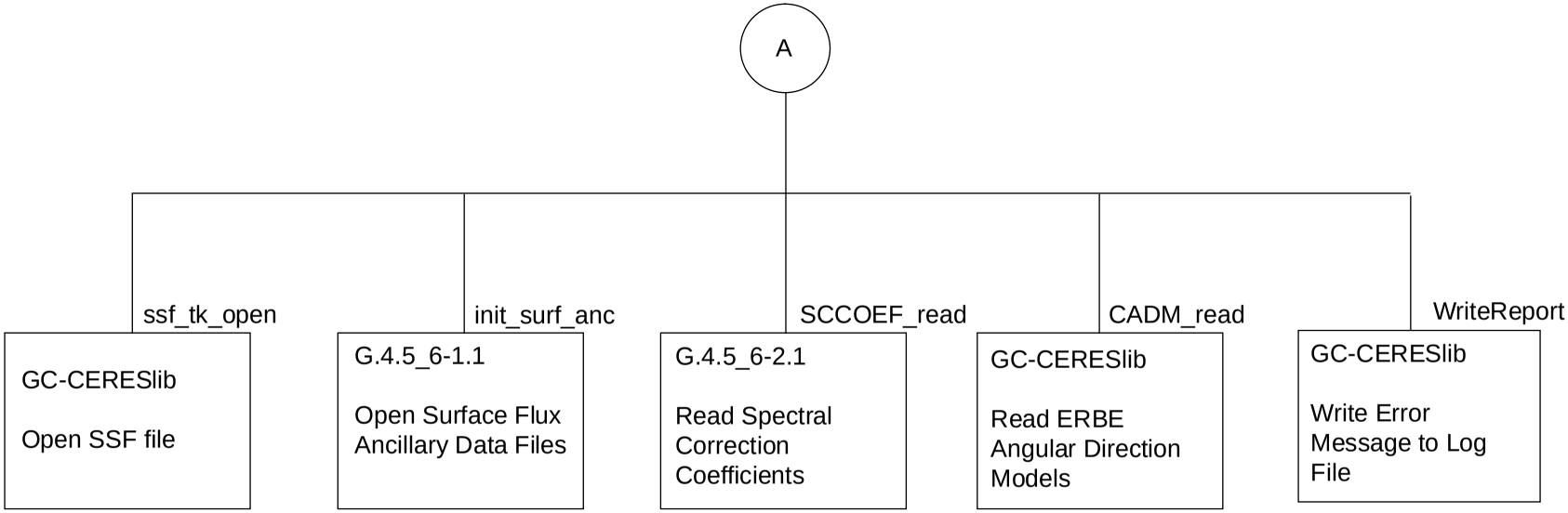

Figure 2-1. CERES TOA and Surface Fluxes Processing Functional Structure Chart (2 of 6)

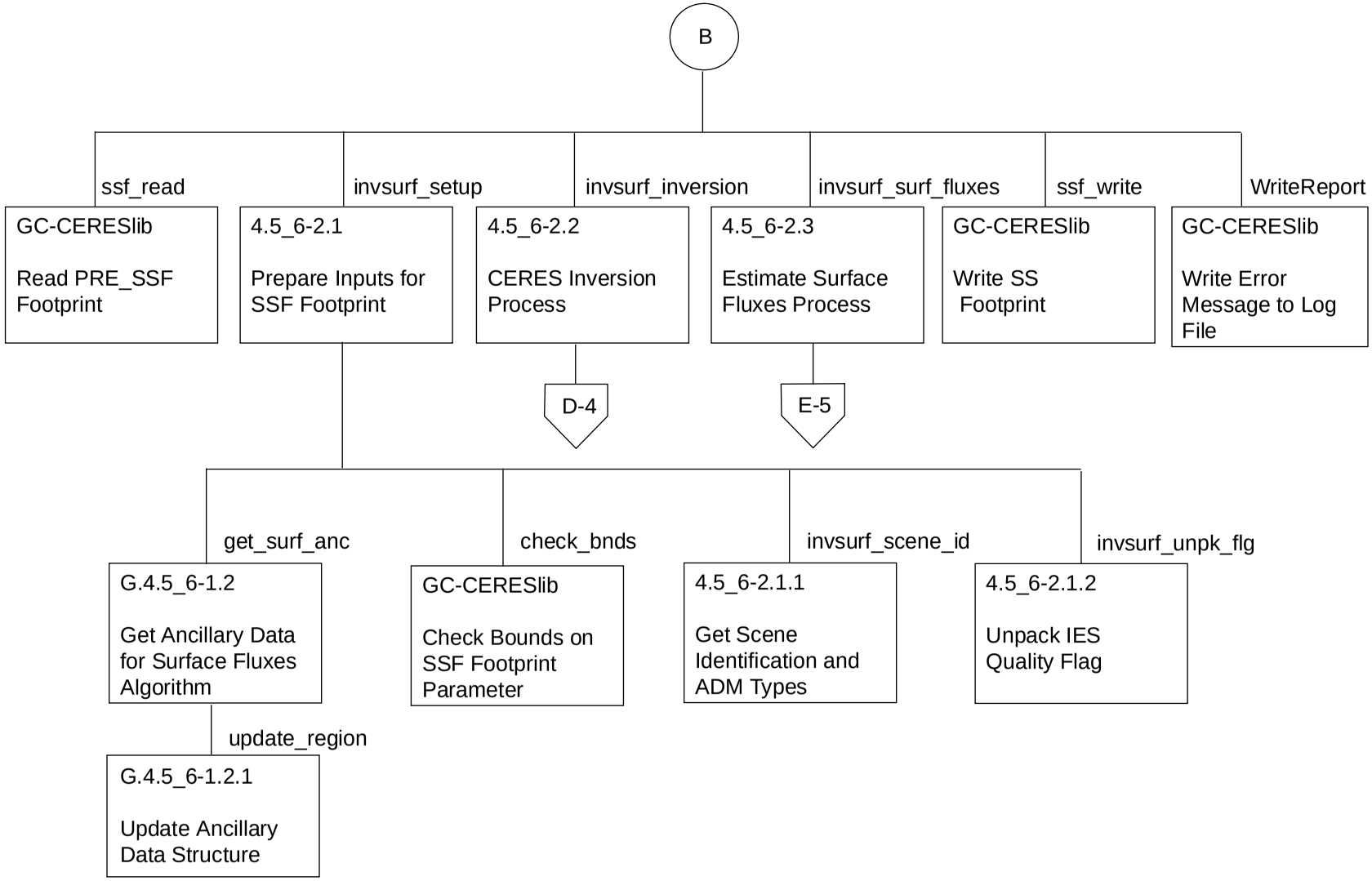

Figure 2-1. CERES TOA and Surface Fluxes Processing Functional Structure Chart (3 of 6)

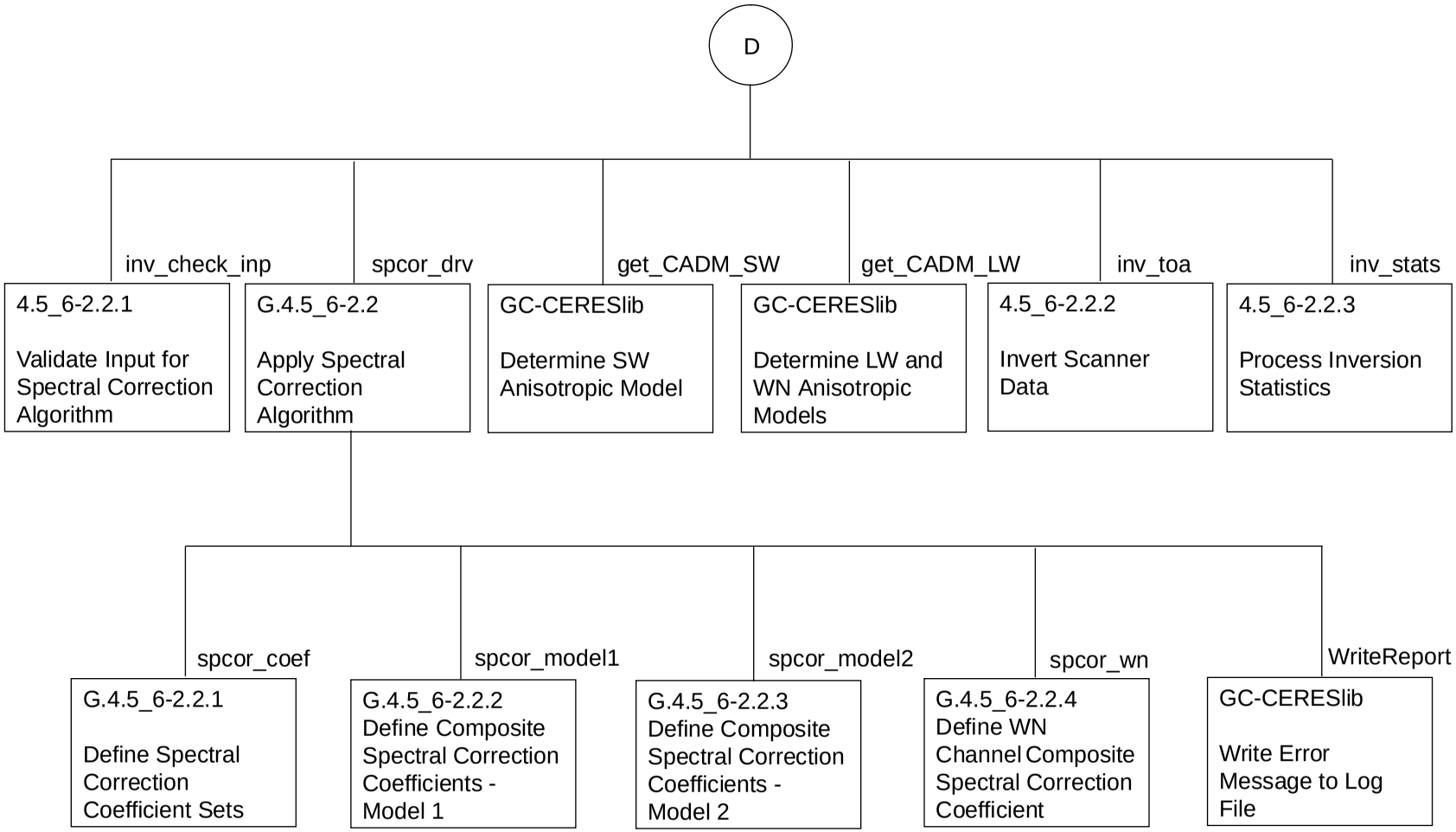

Figure 2-1. CERES TOA and Surface Fluxes Processing Functional Structure Chart (4 of 6)

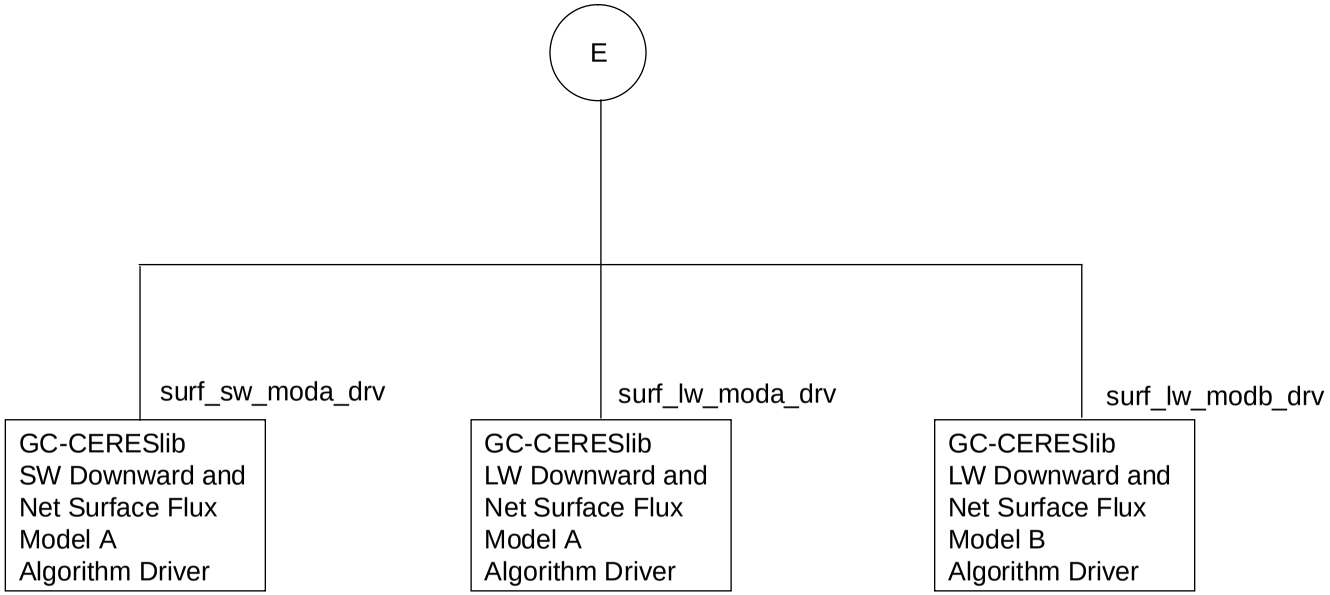

Figure 2-1. CERES TOA and Surface Fluxes Processing Functional Structure Chart (5 of 6)

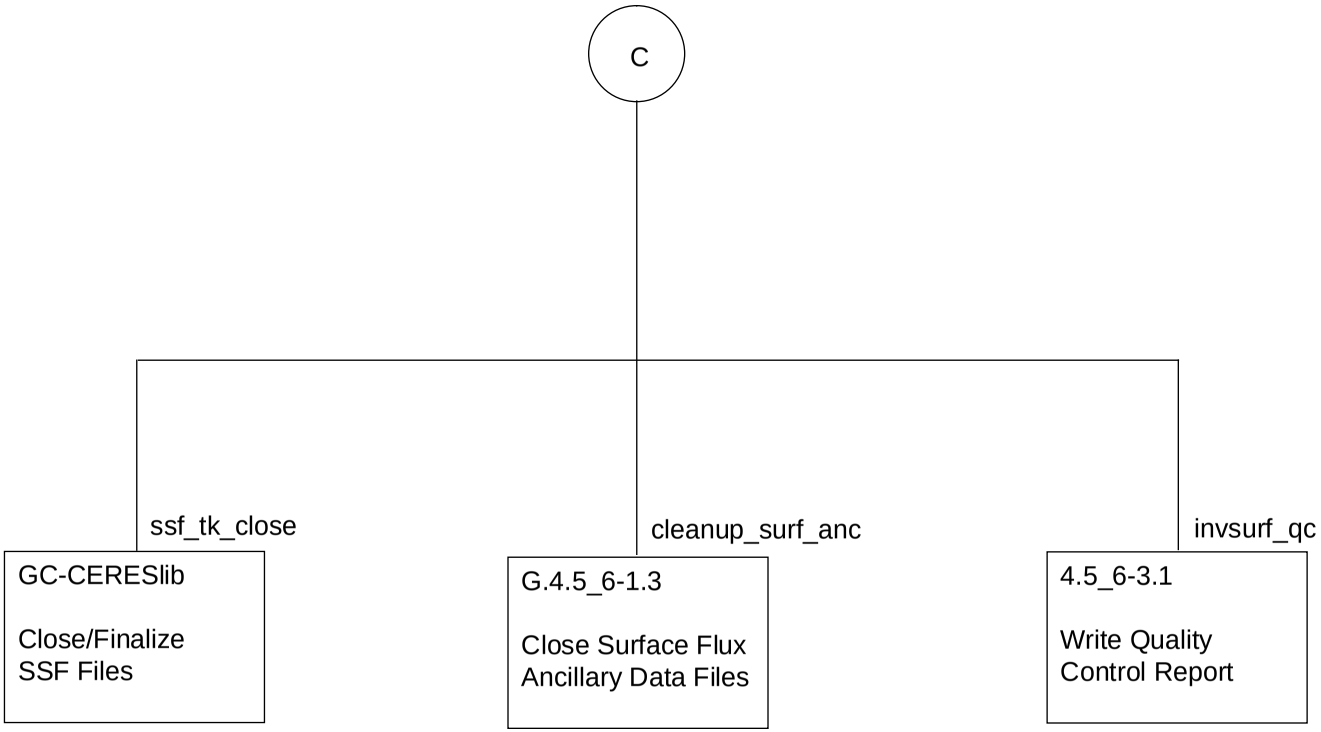

Figure 2-1. CERES TOA and Surface Fluxes Processing Functional Structure Chart (6 of 6)

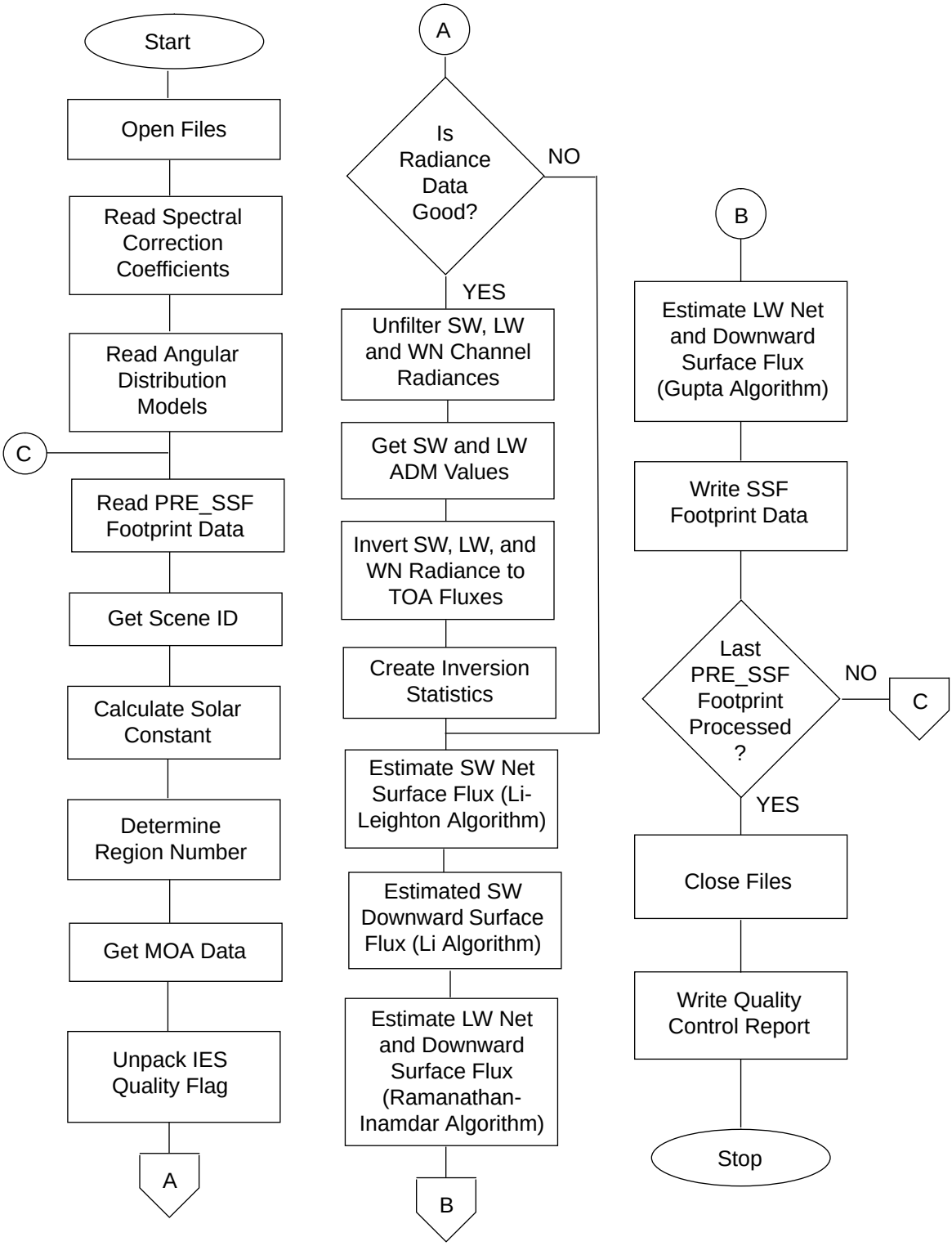

Figure 2-2. CERES TOA and Surface Fluxes Processing Flow

References

1. CERES Instantaneous Inversion to TOA Fluxes and Empirical Estimates of Surface Radiation Budget (Subsystems 4.5 and 4.6) Software Requirements Document, January 1995.

2. CERES Cloud Retrieval (Subsystems 4.1-4.3), 1996.

3. CERES Convolution of Imager Cloud Properties with CERES Footprint Point Spread Function (Subsystem 4.4) Software Design Document, 1996.

4. CERES Algorithm Theoretical Basis Document Overview of Cloud Retrieval and Radiative Flux Inversion (Subsystem 4.0), 1994.

5. CERES Algorithm Theoretical Basis Document Convolution of Imager Cloud Properties with CERES Footprint Point Spread Function (Subsystem 4.4), 1994.

6. CERES Algorithm Theoretical Basis Document CERES Inversion to Instantaneous TOA Fluxes (Subsystem 4.5), 1994.

7. CERES Algorithm Theoretical Basis Document Estimate Longwave and Shortwave Surface Radiation Budget (Subsystem 4.6), 1994.

8. SDP Toolkit Users Guide for the ECS Project, Hughes Applied Information Systems, November 1994.

9. CERES Data Management System Data Products Catalog, Release 1, July 1994.

10. Li, Z., H.G. Leighton, K. Masuda, and T. Takashima, 1993: Estimation of SW flux absorbed at the surface from TOA reflected flux. J. Climate 6, 317-330.

11. Li and Garand: Estimation of Surface Albedo from Space; JGR vol. 99, pg. 8335 - 8350, Apr. 1994.

12. Inamdar, A. K. and V. Ramanathan 1994: Physics of greenhouse effect and convection in the warm oceans, J. Climate, in press.

13. Gupta, S. K., W. L. Darnell, and A. C. Wilber, 1992: A parameterization for longwave surface radiation from satellite data: Recent improvements. J. Appl. Meteorol., Vol. 31, 1361-1367.

APPENDIX A

Abbreviations, Acronyms, and Symbols

Appendix A - Abbreviations, Acronyms, and Symbols

ADM	Angular Distribution Model
ATBD	Algorithm Theoretical Basis Document
AVHRR	Advanced Very High Resolution Radiometer
CADM	CERES Angular Distribution Models
CERES	Clouds and the Earth's Radiant Energy System
DAAC	Distributed Active Archive Center
EOS	Earth Observing System
EOS-AM	EOS Morning Crossing Mission
EOS-PM	EOS Afternoon Crossing Mission
ERBE	Earth Radiation Budget Experiment
ERBS	Earth Radiation Budget Satellite
FOV	Field-of-View
HIRS	High Resolution Infrared Radiation Sounder
IES	Instrument Earth Scans
LW	Longwave
MOA	Meteorological, Ozone, and Aerosol
NASA	National Aeronautics and Space Administration
NOAA	National Oceanic and Atmospheric Administration
PCF	Process Control File
PRE_SSF	Preliminary SSF
PSF	Point Spread Function
RAPS	Rotating Azimuth Plane Scanner
QC	Quality Control
SARB	Surface and Atmospheric Radiation Budget
SCCOEF	Spectral Correction Coefficient File
SDP	Science Data Production
SRD	Software Requirements Document
SSF	Single Satellite CERES Footprint TOA and Surface Fluxes
SW	Shortwave
TOA	Top-of-the-Atmosphere
TOT	Total
TRMM	Tropical Rainfall Measuring Mission
TSFQC	TOA and Surface Flux Quality Control Report
WN	Window

APPENDIX B

External Interface

Appendix B - External Interface

CADM

CERES Angular Distribution Models (CADMs) are inputs to the CERES radiative flux inversion process and are used to invert CERES unfiltered radiance measurements to SW, LW, and WN fluxes at the TOA. For Release 1, the CADM file will contain ERBE production ADMs. This file will include LW (limb darkening) models, SW (bidirectional) models, and SW and LW normalization constants. In Release 1 CERES software, the ERBE LW ADMs, and LW normalization constants will be used to invert the WN channel unfiltered radiance measurements.

- The ERBE LW models are a function of the LW scene type, viewing zenith angle, the colatitude of the scanner target, and the season of the year.

- The ERBE LW normalization constants for bi-linear interpolation are a function of the LW scene type, the colatitude of the scanner target, and the season.

- The ERBE SW models are a function of the SW scene type and three angles: viewing zenith, solar zenith, and the relative azimuth between the Sun and the satellite.

- The ERBE SW normalization constants for tri-linear interpolation are a function of the SW scene type and the solar zenith angle.

The CERES Inversion Working Group will generate and maintain the CADMs. The CADMs will be updated for Release 3, after analyzing the results from approximately 18 months of CERES processing using data from the CERES Rotating Azimuth Plane Scanner (RAPS) (see Reference 1).

MOA

This product is described in the CERES Data Products Catalog (see Reference 9).

PRE_SSF

The PRE_SSF is the intermediate SSF file which is generated by Subsystem 4.4. It has the same format and size as the archival SSF product which is described in the CERES Data Products Catalog (see Reference 9).

SCCOEF

The Spectral Correction Coefficient File, SCCOEF, contains data which correct the radiometric measurements for the imperfect spectral response of the optical path in the CERES instrument. The spectral correction data consists of parameters and spectral correction coefficients which are used in calculating the SW, LW, and WN unfiltered radiance estimates from the SW, TOT, and WN scanner measurements. The spectral correction coefficient algorithm requires both daytime and nighttime coefficients. Up to nine of these coefficients must be selected for each CERES footprint based on spacecraft geometry, spectral correction scene type, and the availability of data from the three scanner channels. The daytime coefficients are a function of 12 CERES spectral correction scene types, four satellite viewing zenith bins, four solar zenith bins, five relative azimuth bins, and an index reflecting channel data availability. The nighttime coefficients are a function of 12 CERES spectral correction scene types, four viewing zenith bins, and an index reflecting channel data availability. The spectral correction coefficient data files are spacecraft platform dependent.

SSF

Single Satellite CERES Footprint TOA and Surface Fluxes, SSF, is the archival product which is completed by Subsystems 4.5 and 4.6. It is described in the CERES Data Products Catalog (see Reference 9).

TSFQC

TOA and Surface Flux Quality Control Report, TSFQC, contains the quality control reports produced by the CERES Inversion to Instantaneous TOA Fluxes and Empirical Estimates of Surface Radiation Budget, Subsystems 4.5 and 4.6. Information provided in these reports will include:

- Spacecraft and instrument identification
- Data date and temporal span
- Processing date and time of the CERES Inversion to Instantaneous TOA Fluxes and Empirical Estimates of Surface Radiation Budget, Subsystems 4.5 and 4.6
- Software version number of the CERES Inversion to Instantaneous TOA Fluxes and Empirical Estimates of Surface Radiation Budget, Subsystems 4.5 and 4.6
- Processing date and time of Determine Cloud Properties Subsystem
- Software version number of Determine Cloud Properties Subsystem

- Number of CERES footprints processed
- Diagnostic messages
- Scene ID data
- Statistical data for the following:
  - Scene ID
  - TOA Flux
  - Surface Flux

An example of a preliminary Quality Control (QC) Report for Subsystems 4.5 and 4.6 is included in this Appendix.

CERES TOA AND SURFACE FLUXES QC REPORT

PAGE: 1 CERES PRODUCT: SSF

DATE PROCESSED:	02/29/1996 13:58:32	SATELLITE:	NOAA-9
TEMPORAL SPAN:	1986-10-01 HOUR - 05:00	INSTRUMENT:	ERBE
SYSTEM RELEASE:	1	CHANNEL:	
SOFTWARE VERSION:	1		

****
Total number of footprints processed = 32032
****
Number of footprints ID-ed as unknown ADM type = 142
****
Number of unprocessed footprints because all channel
radiance data flagged bad = 441
****
Number of footprints ID-ed as unknown geo type = 142
Number of footprints ID-ed as ocean = 22804
Number of footprints ID-ed as land = 7489
Number of footprints ID-ed as snow = 743
Number of footprints ID-ed as desert = 18
Number of footprints ID-ed as coast = 836
Number of footprints (COAST by Erika's alg) = 627
Number of footprints ID-ed as OVERCAST ADM type
when underlying geo type is unknown = 0
****
Number of footprints ID-ed as unknown clouds = 0
Number of footprints ID-ed as clear = 15846
Number of footprints ID-ed as partly cloudy = 8058
Number of footprints ID-ed as mostly cloudy = 6687
Number of footprints ID-ed as overcast = 1441
****
SSF area fraction ocean = 0.709370
SSF area fraction mountains = 0.010913
SSF area fraction other land = 0.227439
SSF area fraction snow = 0.024232
SSF area fraction desert = 0.000594
SSF area fraction coast = 0.027452
****

Figure B-1. CERES TOA and Surface Fluxes QC Report (1 of 2)

```
Number of footprint ADM types ID-ed as UNKNOWN due to
 SW ADM value(RMAX) = 0
Number of SW TOA estimates rejected on minimum albedo = 0
Number of SW TOA estimates rejected on maximum albedo = 152
Number of LW TOA estimates rejected on minimum flux  = 0
Number of LW TOA estimates rejected on maximum flux  = 0
Number of TOA estimates rejected on maximum viewing zenith angle  = 0
Number of bad SW channel filtered radiance measurements = 441
Number of bad WN channel filtered radiance measurements = 441
Number of bad TOT channel filtered radiance measurements = 441
Number of WN TOA estimates rejected on minimum flux = 0
Number of WN TOA estimates rejected on maximum flux = 0
*******************************************************
Number of SW TOA estimates rejected = 1308
Number of H2o  values rejected  = 0
Number of TOA albedo rejected = 0
Number of surface albedo estimates rejected = 52
Number of SW surface flux set to 0 for nighttime =  7958
*******************************************************
Number of valid LW surface flux NETA computed = 10352
Number of valid LW surface flux DNA computed = 10352
Number of LW surface flux NETA out of range = 0
Number of LW surface flux DNA out of range = 0
Number of LW model A: input out of range = 16633
Number of LW model A: no alg. for this surface =  5047
Number of LW model A: Other error = 0
*******************************************************
Number of LW surface flux B est. calc with uws = .5:  365
*******************************************************
Number of SW surface flux NETA est. set to default = 2851
Number of SW surface flux DNA est. set to default = 2931
Number of LW surface flux NETA est. set to default = 21680
Number of LW surface flux DNA est. set to default = 21680
Number of LW surface flux NETB est. set to default = 0
Number of LW surface flux DNB est. set to default = 0
*******************************************************
```

Figure B-1. CERES TOA and Surface Fluxes QC Report (2 of 2)

APPENDIX C

Data and Constants

Appendix C - Data and Constants

Table C-1. F90 Module inv_data Constants (1 of 2)

NAME	DESCRIPTION	VALUE	DATA TYPE
ALBEDO_MAX	maximum albedo limit for acceptable SW TOA flux	1.0	Real
ALBEDO_MIN	minimum albedo limit for acceptable SW TOA flux	.02	Real
CLEAR	index for 0% - 5% cloud cover	1	Integer
COASTAL_SCN	spectral correction geo scene type -50/50 ocean/land mix	5	Integer
COASTAL_OFFSET	scene type offset for land if scene type is coastal	4	Integer
COLAT_BIN_FAC	colatitude bin factor	30.0001	Real
DEL_CSUN_SPEC	factor used to calculate cosine of solar zenith bin number	.250001	Real
DEL_RAZ_SPEC	factor used to calculate relative azimuth bin number	15.00001	Real
DEL_VZEN_SPEC	factor used to calculate viewing zenith bin number	15.00001	Real
DEL_VZEN_ZONE	factor used to calculate viewing zenith QC report bin number	3.00001	Real
DEL_CSUN_ZONE	factor used to calculate cosine of solar zenith QC report bin number	9.99999	Real
DESERT_AT_POLES	desert at the poles scene type flag	-999	Integer
LATZON_FAC	latitude zone bin factor	2.5	Real
MAP_RAZ	an array (12) used to map from equally spaced azimuth bins to unequally spaced azimuth bins		Integer
MAP_VZEN	an array (6) used to map from equally spaced spacecraft zenith bins to unequally spaced spacecraft zenith bins		Integer
MAP_NCASE	an array (8) used to determine the value of variable ncase		Integer
MODEL	an array (20) mapping geo-scene type and cloud cover to ERBE Inversion scene type		Integer
MOSTLTY_CLOUDY	scene type offset for 50% - 95% cloud cover	3	Integer
NO_ERROR	flag which indicates that no error occurred	0	Integer
OVERCAST	index for overcast - 95% - 100% cloud cover	4	Integer
OVERCAST_OFFSET	scene type offset for overcast cloud cover	7	Integer
PARTLTY_CLOUDY	index for 5% - 50% cloud cover	2	Integer

Table C-1. F90 Module inv_data Constants (2 of 2)

NAME	DESCRIPTION	VALUE	DATA TYPE
REGION_SIZE	size of colatitude regions	10.0001	Real
RMAX	maximum for bidirectional shortwave model value	2.0	Real
SP_MODEL_NUM	logic ID number for spectral correction model parameter	601	Integer
SZEN_MAX_TOA	maximum solar zenith angle for which SW measurements are to be inverted	86.5	Real
UNKNOWN	index for unknown scene type	0	Integer

APPENDIX D

Error Messages

Appendix D - Error Messages

Table D-1 contains error messages which may be generated by Subsystems 4.5 and 4.6.

Table D-1. Error Messages

ERROR MESSAGE	FROM SUBROUTINE OR MODULE
*** ERROR READING MOA IN REGION: xxxxxx	access_anc
*** ERROR reading LW CADM file	CADM_mod
*** ERROR scene id out of range (1-12) , iscene = xx	CADM_mod
*** ERROR colatitude out of range (0.-180.) , colat = xxxxx	CADM_mod
*** ERROR viewing zenith angle out of range (0.-90), vzen = xxxxxx	CADM_mod
*** ERROR relative azimuth angle out of range (0.-180.), raz = xxxxxx	CADM_mod
*** ERROR cosine of solar zenith out of range (0.-1.), csun = xxxxx	CADM_mod
*** END of FILE read on PRE-SSF file	invsurf_footprint
*** ERROR reading from PRE-SSF file	invsurf_footprint
'*** ERROR writing to SSF file	invsurf_footprint
*** Unable to obtain Spcor model number from PCfile	invsurf_start
*** ERROR opening PRE_SSF file	invsurf_start
*** ERROR opening SSF file	invsurf_start
*** ERROR in footprint xxxxx : iflg = xxxxx out of range'	invsurf_unpk_flg
*** ERROR reading SCCOEF file	spcor_mod
*** INVALID IGEOCN - DESERT AT POLE, NGEO = xxx , LATZON= xxx , dayflg= xx	spcor_mod
*** COULD NOT OPEN FILE: xxx , IO STATUS ERROR = xxxxx	ssf_typdef
*** COULD NOT READ SSF HEADER RECORD FOR FILE: xxxx	ssf_typdef
*** EXPECTED TO READ HEADER RECORD FOR FILE: xxxxx	ssf_typdef
*** RECORD = xxxxx IS ILLEGAL. WRITE IGNORED	ssf_typdef
*** IO STATUS = xxxxx ERROR WRITING SSF RECORD xxxxx	ssf_typdef
*** UNABLE TO WRITE HEADER TO RECORD 1 OF SSF	ssf_typdef
*** COSINE OF SOLAR ZENITH ANGLE IS NEGATIVE, CSUN = xxxxx	surf_sw_model_a

APPENDIX E

Structure Chart Symbols

Appendix E - Structure Chart Symbols

The following symbols are used in the structure and flow charts in Figure 2-1 and Figure 2-2:

Figure E-1. Structure Chart Symbols