Koninklijk Meteorologisch Instituut

Institut Royal Météorologique

Königliche Meteorologische Institut

Royal Meteorological Institute

The **A**bsolute **S**olar-**TE**rrestrial **R**adiation **I**mbalance e**X**plorer (**ASTERIX**) **6U CubeSat mission:** a European contribution to the monitoring of the Earth's radiation budget from the morning orbit

Luca Schifano – RMIB and VUB (B-PHOT)

Steven Dewitte – RMIB
Lien Smeesters, Francis Berghmans – VUB (B-PHOT)
Mustapha Meftah, Philippe Keckhut – LATMOS

CERES Fall 2020 Science Team Meeting

16 September 2020

Collaboration

RMI

SIMBA CubeSat (3U)

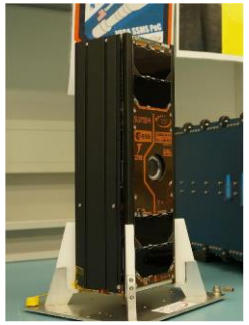

LATMOS

UVSQ-SAT CubeSat (1U)

VUB

B-PHOT BRUSSELS PHOTONICS

(instrumentation)

WFOV radiometer

WFOV SW camera

WFOV LW camera

RMI + LATMOS

ASTERIX CubeSat (6U)

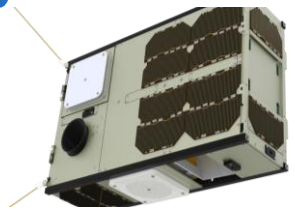

GOMSPACE

(platform)

Morning orbit

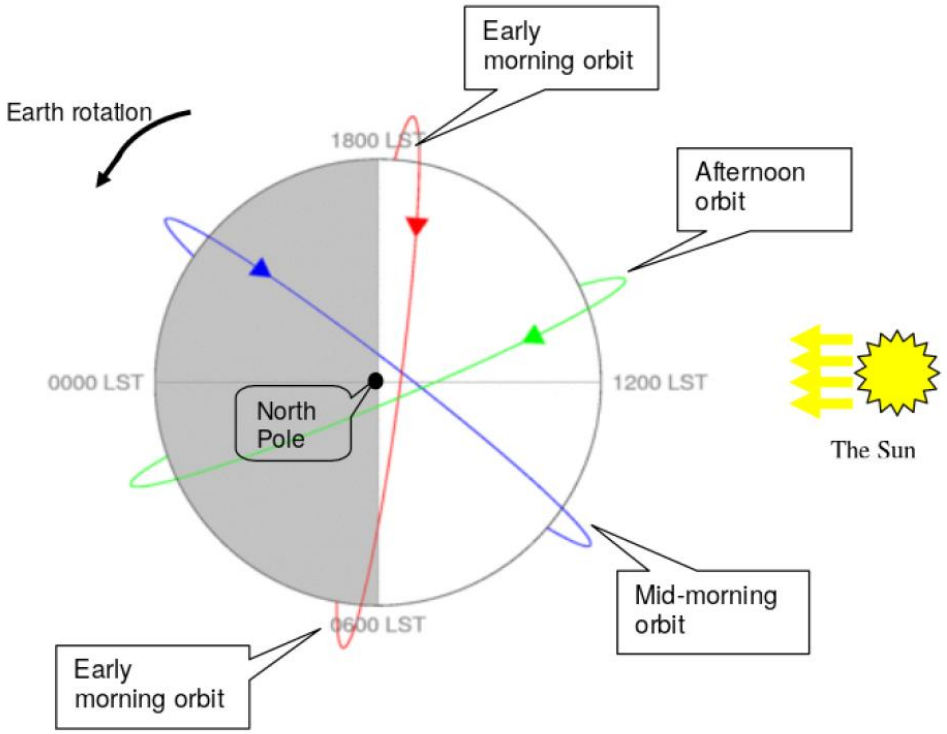

Report of the WMO Tiger team (2013), Assessment of the benefits of a satellite mission in an early morning orbit

- Afternoon orbit: Aqua, NPP, NOAA-20, Libera
- Mid-morning orbit: Terra, **ASTERIX**
- CubeSat (less cost, less time)

➔ **Complementary**

Mission objective

Observing the Sun and the Earth with the same instrument

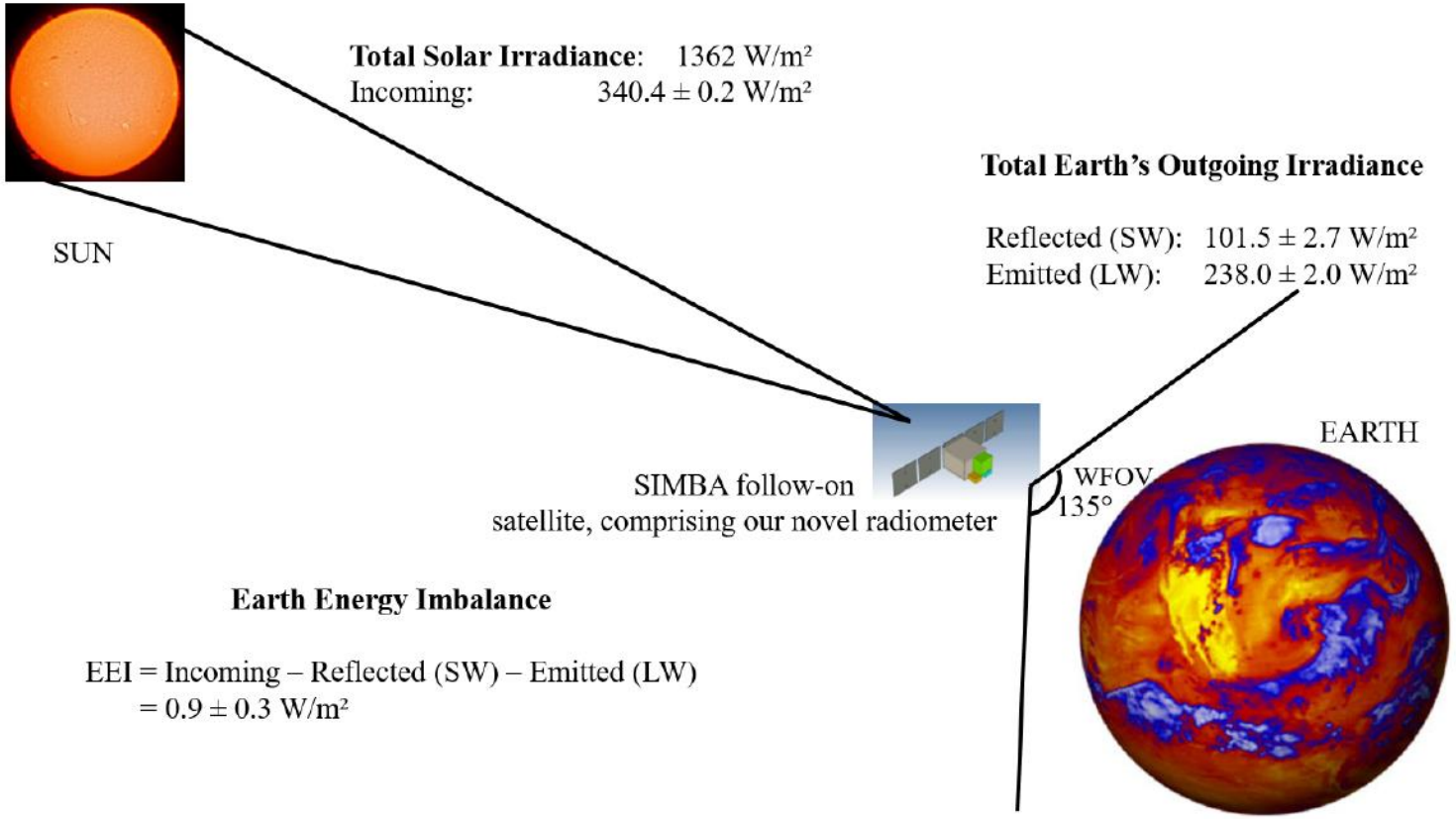

L. Schifano et al. (2020), Design and Analysis of a Next-Generation Wide Field-of-View Earth Radiation Budget Radiometer

Instruments

WFOV radiometer

WFOV SW camera

WFOV LW camera

General targeted specifications

- **CubeSat size: 6U**
- **Targeted accuracy: 1 W/m² (global annual mean ERB)**
- **Targeted spatial resolution: 5 km (in SW and LW)**
- **Targeted launch date: 2024 – 2026**

Wide field-of-view radiometer

WFOV radiometer

- Field-of-view: from limb to limb (135°)
- Targeted accuracy: 1 W/m²
- Size: max. 1 CubeSat Unit

Wide field-of-view radiometer

DIARAD-type: heritage from TSI radiometers and SIMBA CubeSat (RMIB)

FOV = 135°

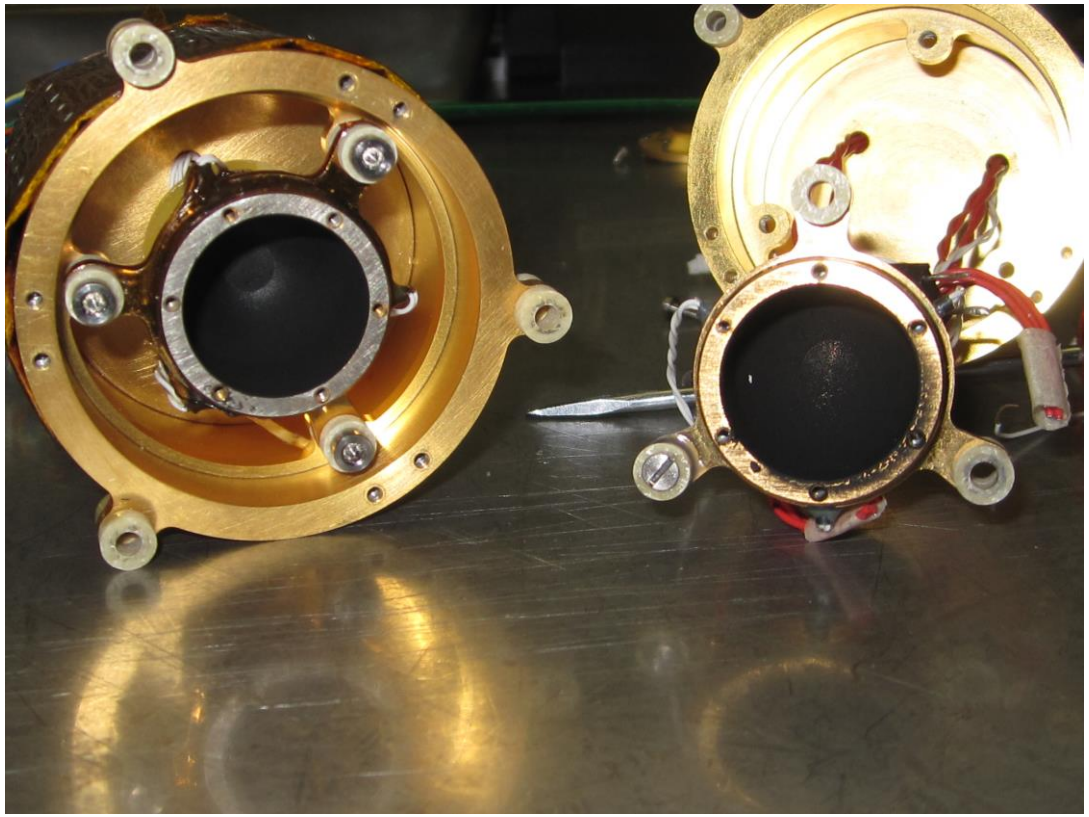

Wide field-of-view radiometer

DIARAD-type: heritage from TSI radiometers and SIMBA CubeSat (RMIB)

FOV = 135°

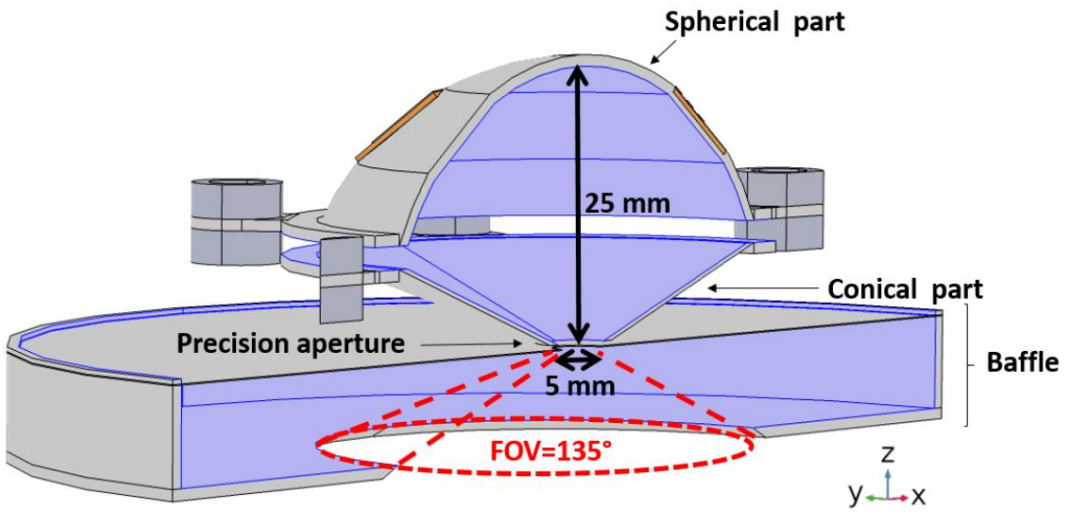

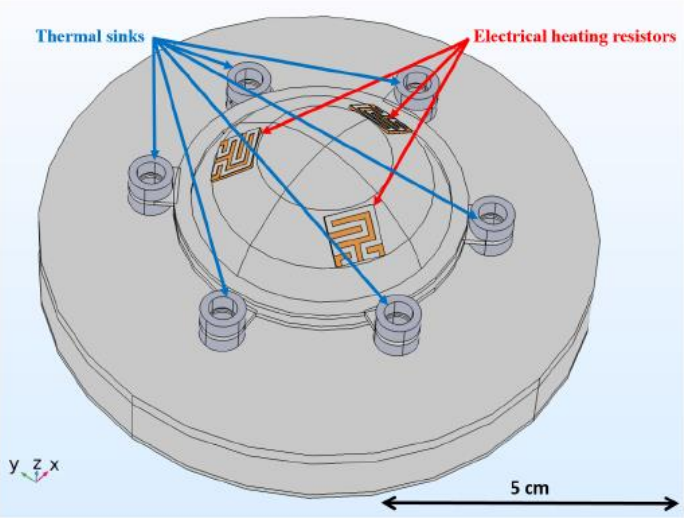

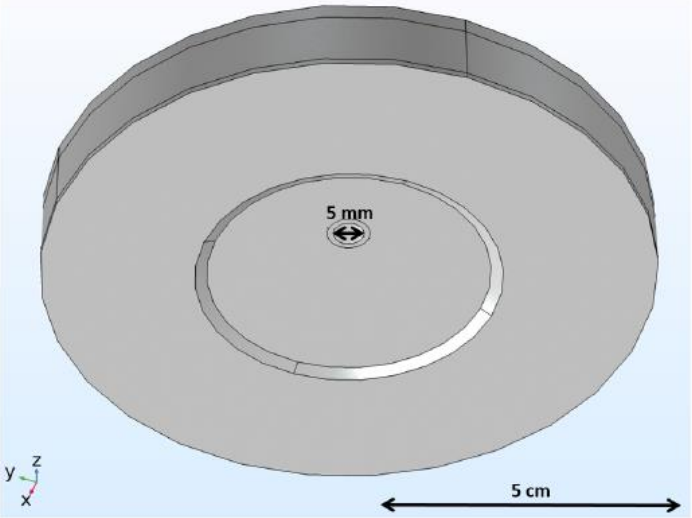

L. Schifano et al. (2020), Design and Analysis of a Next-Generation Wide Field-of-View Earth Radiation Budget Radiometer

Shutter operation

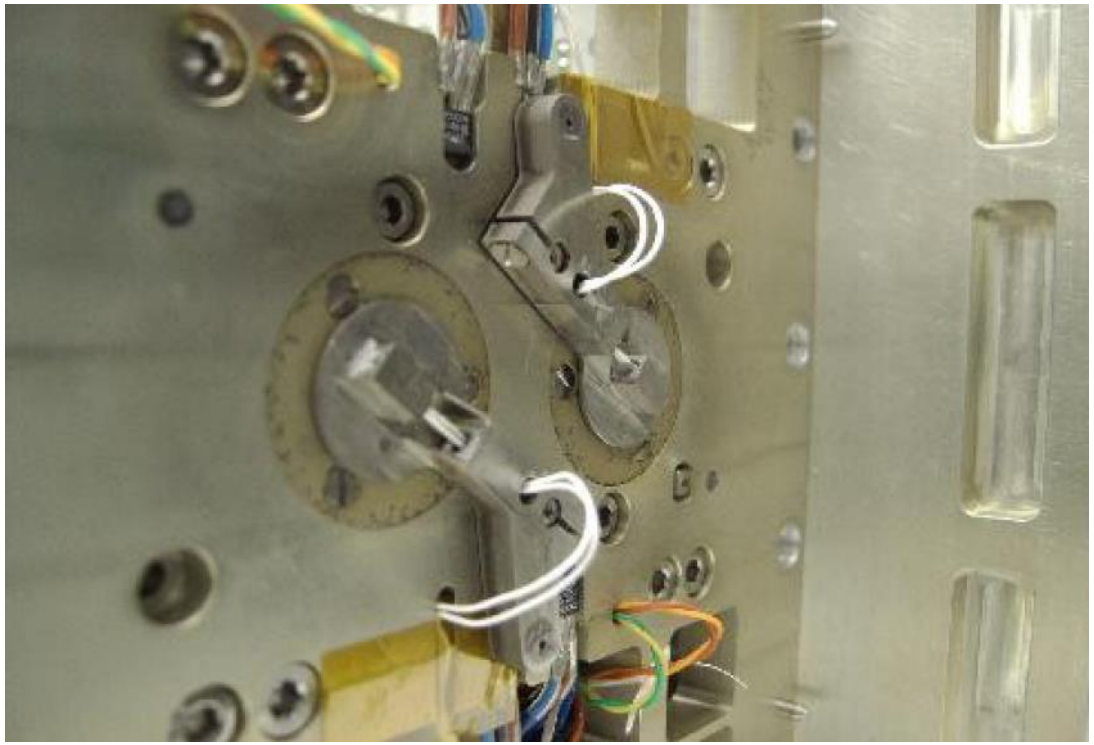

- Major issue: **thermal offset**

- **Solution: shutter**

  → Differential open – closed measurement removes slowly varying thermal offsets

- Absolute accuracy = 1 W/m²

Instruments

WFOV radiometer

WFOV SW camera

WFOV LW camera

Instruments: WFOV cameras

WFOV radiometer

WFOV SW camera

WFOV LW camera

Shortwave camera

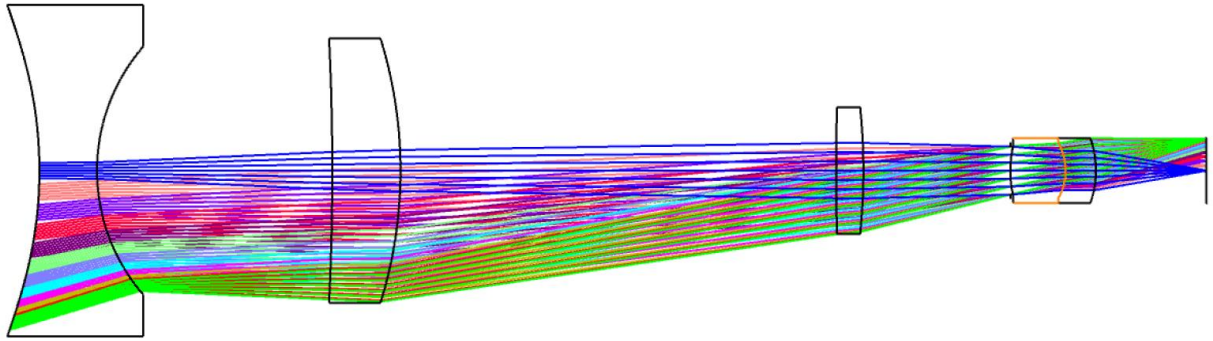

L. Schifano et al. (2020), Optical System Design of a Wide Field-of-View Camera for the Characterization of Earth's Reflected Solar Radiation

[400 – 1100] nm

FOV = 140°

COTS detector:
Aptina MT9T031
2048x1536 pixels of 3.2 µm

Spatial resolution = 2.2 km

Broadband albedo
random error < 3% across all simulated scene types and all solar-zenith angles

Longwave camera

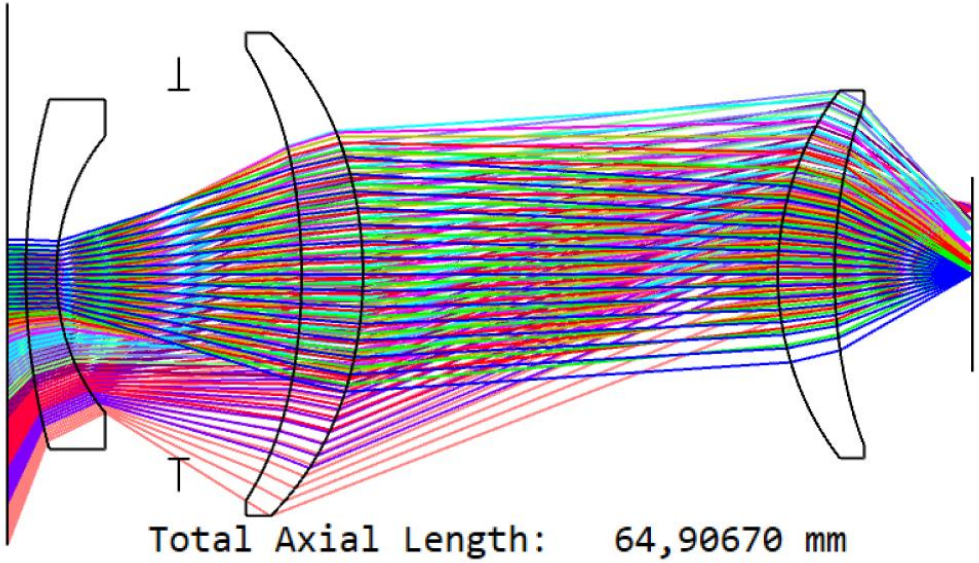

L. Schifano et al., (in prep.) Optical System Design of a Wide Field-of-View Camera for the Characterization of Earth's Emitted Thermal Radiation

[8 – 14] µm

FOV = 140°

COTS detector:
ULIS/Lynred Pico1024 Gen2
1064x748 pixels of 17 µm

Spatial resolution = 4.6 km

Radiative transfer simulations under study

Conclusion

- CubeSat mission (6U) with European partners
- WFOV radiometers + WFOV SW camera + WFOV LW camera
- Radiometers with shutters to remove thermal offset
- Accuracy + improved spatial resolution
- Radiometer and SW camera published in open access:
  - Radiometer: https://www.mdpi.com/2072-4292/12/3/425
  - SW camera: https://www.mdpi.com/2072-4292/12/16/2556